Company Name

Street Address
City, State & Zip
Office Phone
Fax Number
Cell Phone Number
E-mail address
State License & Registration Numbers

Name of the Project

Street Address
Prosper, Texas 75078
Construction Project Permit # issued by the Town

Submittal For

Access Control System Plans and Equipment Data Sheets

FROM:
Name of the Person Submitting for Review
State License Number
Contact Phone Number(s)
E-mail address

Date of Submittal

General Contractor

Street Address
City, State & Zip
Site Contact Name
Site Phone Number(s)
Site E-mail address

LIST OF MATERIALS:

FIRE ALARM

6	**ALARM CONTROLS 1200S MAGNETIC DOOR LOCKS**
1	**SECO SS-090 OUTDOOR KEYSWITCH**
1	**OUTDOOR ROSSLARE PIN/PROX READER** ACQ-42HB
3	**KANTECH T.REX EXIT MOTION DETECTORS**
6	**ALARM CONTROLS REB EXIT RELEASE BARS**
1	**ALTRONIX ACM LOCKING SYSTEM POWER SUPPLY**
1	**TRANSFORMER 24VAC**
1	**ALTRONIX RB524 RELAY 24VAC FORM C**
1	**8AH BATTERY**
1	**ASSA ABLOY MECHANICAL EXIT BAR 8800**
1	**AIPHONE DESK MASTER STATION LEF3**
1	**AIPHONE LEDA OUTDOOR CALL STATION**
LOT	**16G FPLP CABLE FOR ACCESS CIRCUITS**
LOT	**18/4G FPLP SAME**

METAL BUTTON PIN/PROXIMITY CONTROLLERS

- Programmable blue backlit keypad (selected models)

AC-Q41H

Anti-Vandal PIN Standalone Controller

- Terminal block interface for wiring

AC-Q41HB

Anti-Vandal Backlit PIN

- Standalone controller
- Terminal block interface for wiring

AC-Q41SB

Anti-Vandal Slim Backlit PIN Standalone Controller

- Pre-wired, 10-conductor 24 AWG cable

AC-Q42H

Anti-Vandal PIN & Proximity Standalone Controller

- Terminal block interface for wiring

AC-Q42HB

Anti-Vandal Backlit PIN & Proximity Standalone Controller

- Terminal block interface for wiring

AC-Q42SB

Anti-Vandal Slim Backlit PIN & Proximity Standalone Controller

- Pre-wired, 10-conductor 24 AWG cable

REB Series

Request to Exit Push Bar

Specifications

- Low profile design, 2-1/2" W x 2" H
- Available in 34-1/2" or 48" lengths
- Four SPDT switches for positive redundant operation

Options

- Clear anodized satin aluminum finish standard
- Duranodic (US40) finish available

Features

- Low operating force, minimal bar travel
- 18" armored door loop included with changeable white and brown end caps
- Field reversible and easily installed on all types of doors
- Bars can be field cut to opening width
- Limited lifetime warranty

Models

REB-1
34-1/2" RTE Push Bar 2 DPDT Switches, Door Loop included

REB-1 DURO
34-1/2" RTE Push Bar, 2 DPDT Switches, Door Loop included, US 40 Duranodic Finish

REB-3
48" RTE Push Bar 2 DPDT Switches, Door Loop included

REB-3 DURO
48" RTE Push Bar 2 DPDT Switches, Door Loop included, US 40 Duranodic Finish

ALARMCONTROLS

© 2017 Hanchett Entry Systems, Inc., an ASSA ABLOY Group Company

alarmcontrols.com • 800.645.5538

ALARM CONTROLS

ASSA ABLOY

ASSA ABLOY, the global leader in door opening solutions

MODEL REB-1 PUSHBAR

ALARM CONTROLS CORPORATION

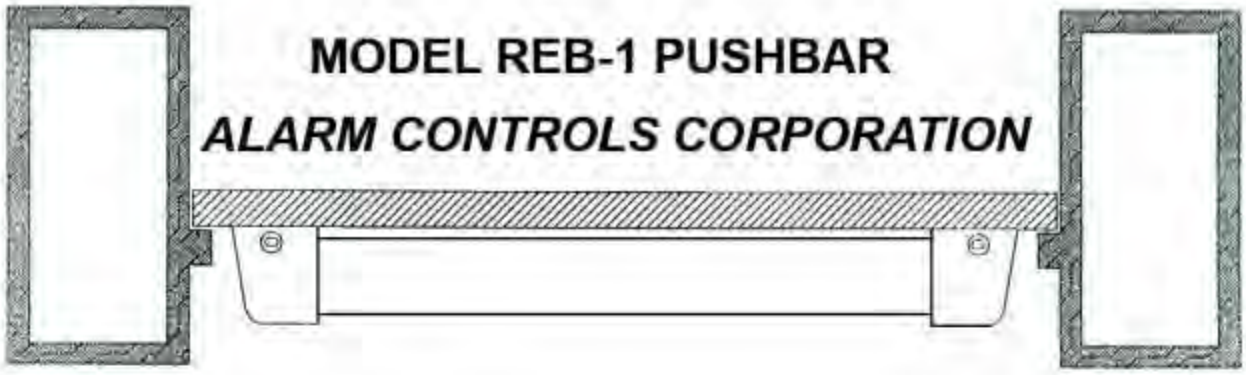

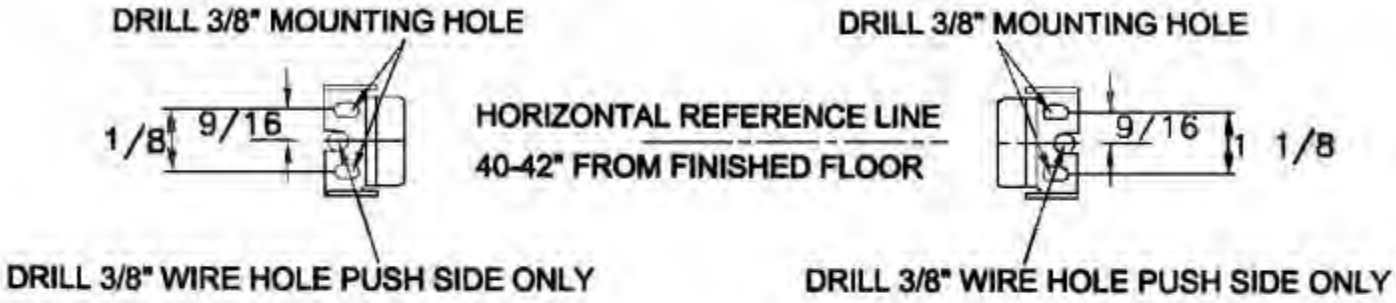

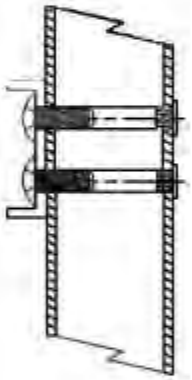

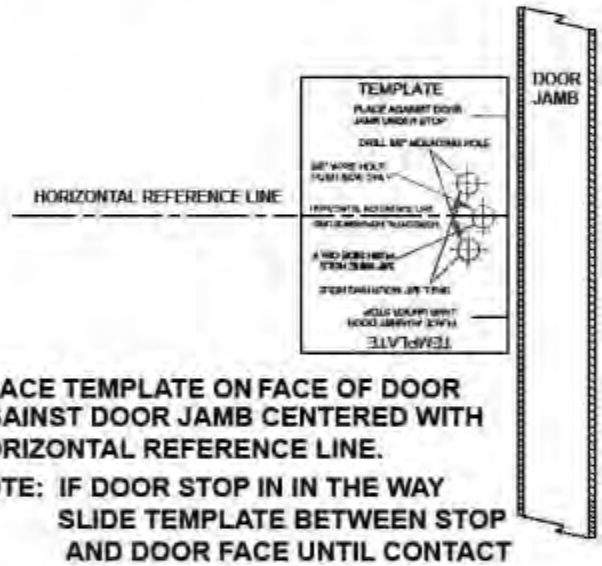

PLACE TEMPLATE ON FACE OF DOOR AGAINST DOOR JAMB CENTERED WITH HORIZONTAL REFERENCE LINE.

NOTE: IF DOOR STOP IN IN THE WAY SLIDE TEMPLATE BETWEEN STOP AND DOOR FACE UNTIL CONTACT WITH DOOR JAMB IS MADE.

5 AMP 125/250 VAC

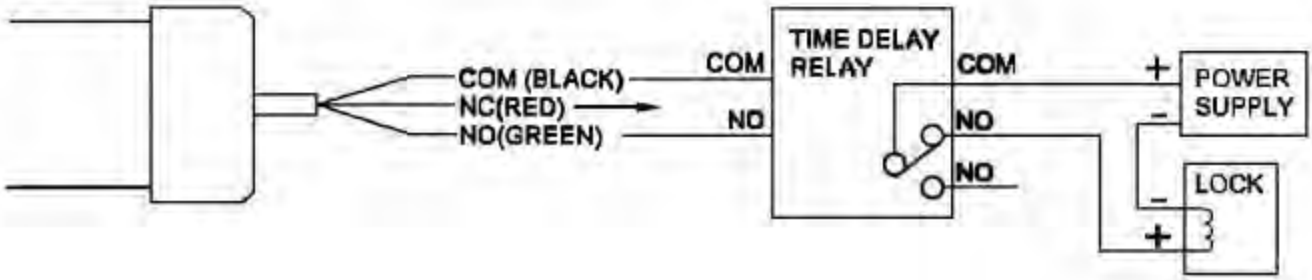

TEMPLATE

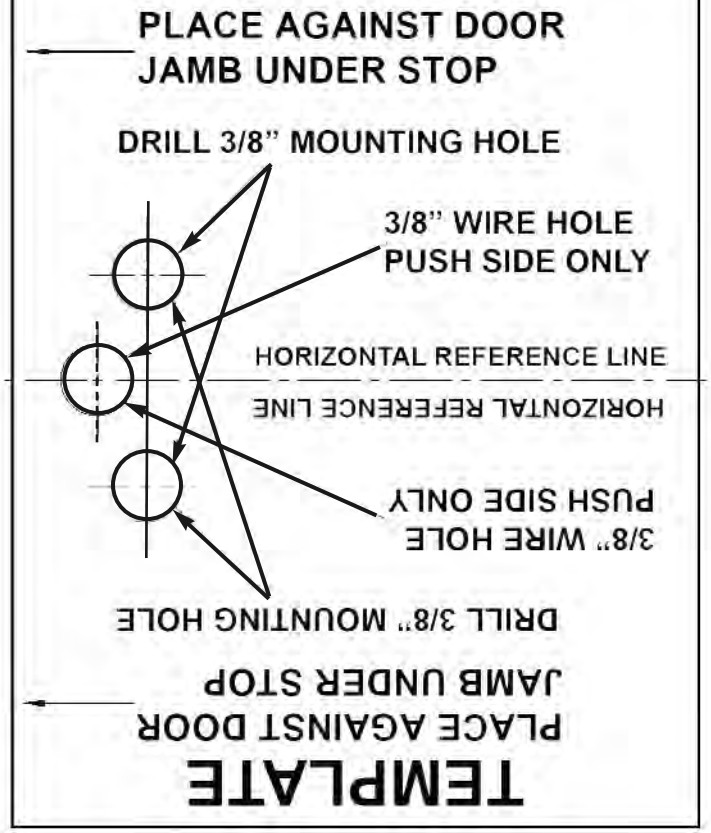
PLACE AGAINST DOOR
JAMB UNDER STOP
DRILL 3/8" MOUNTING HOLE
3/8" WIRE HOLE
PUSH SIDE ONLY
HORIZONTAL REFERENCE LINE
HORIZONTAL REFERENCE LINE
3/8" WIRE HOLE
PUSH SIDE ONLY
DRILL 3/8" MOUNTING HOLE
PLACE AGAINST DOOR
JAMB UNDER STOP
TEMPLATE

RELAY MODULES

RB1224
- 12VDC or 24VDC selectable operation.
- Current draw 75mA.
- DPDT contacts rated at 5 amp/220VAC or 28VDC.
- Snap track mountable (order part# ST1).

Board dimensions: 2”L x 2.75”W x 1”H

RB30
- 12VDC or 24VDC selectable operation.
- Current draw 95mA.
- SPDT contacts rated at 30 amp/120VAC or 28VDC.
- Heavy duty load switching applications.
- Snap track mountable (order part# ST1).

Board dimensions: 2”L x 2.75”W x .75”H

RBSN
- 12VDC or 24VDC selectable operation.
- Current draw 15mA.
- DPDT contacts rated at 1 amp/120VAC or 2 amp/28VDC
- Snap track mountable (order part# ST1).

Board dimensions: 2”L x 2.75”W x 1”H

RBSNTTL
- Ultra sensitive relay.
- 12VDC to 24VDC selectable operation.
- 3VDC to 24VDC, 2mA isolated positive or negative trigger.
- Current draw 18mA.
- DPDT contacts rated at 1 amp/120VAC or 2 amp/28VDC.
- Snap track mountable (order part# ST1).

Board dimensions: 2.75”L x 1.9”W x 1.1”H

RBST
- 6VDC, 12VDC or 24VDC selectable operation.
- Current draw 30mA.
- DPDT contacts rated at 1 amp/120VAC or 2 amp/28VDC.
- Snap track mountable (order part# ST1).

Board dimensions: 2.75”L x 1.9”W x 1.1”H

RB5
- 6VDC or 12VDC selectable operation.
- Current draw 120mA.
- DPDT contacts rated at 5 amp/220VAC or 28VDC.
- Snap track mountable (order part# ST1).

Board dimensions: 2.75”L x 1.9”W x 1.35”H

RB524
- 24VDC operation.
- Current draw 40mA.
- DPDT contacts rated at 5 amp/220VAC or 28VDC.
- Snap track mountable (order part# ST1).

Board dimensions: 2.75”L x 1.9”W x 1.35”H

RBSN

* Refer to page 175 for DIN Rail Mounting Accessories.

KANTECH
From Tyco Security Products

T.Rex
Request to Exit Detector

Features That Make a Difference:

- Accurate and adjustable detection zone
- Horizontal and vertical adjustment
- Unlocks or shunts door automatically
- Hands-free, no buttons to push

The Smart Exit Detector

T.Rex provides a complete solution to exit detection and door surveillance for access control applications. Outstanding innovations such as horizontal and vertical Detection Zone Targeting and DSP (Digital Signal Processing) make T.Rex the fastest and most reliable exit detector on the market today.

Horizontal and vertical targeting adds an extra layer of security by adjusting the detection zone. The detection area of the T.Rex can be adjusted so that it will not "hit" the floor along the doorjamb, defeating any attempt to circumvent door supervision by sliding objects under the door.

In addition, it uses infrared detection coupled with DSP sampling to allow the T.Rex to accurately detect exits and prevent false "Door Forced Open" alarms.

Installation and Detection Pattern

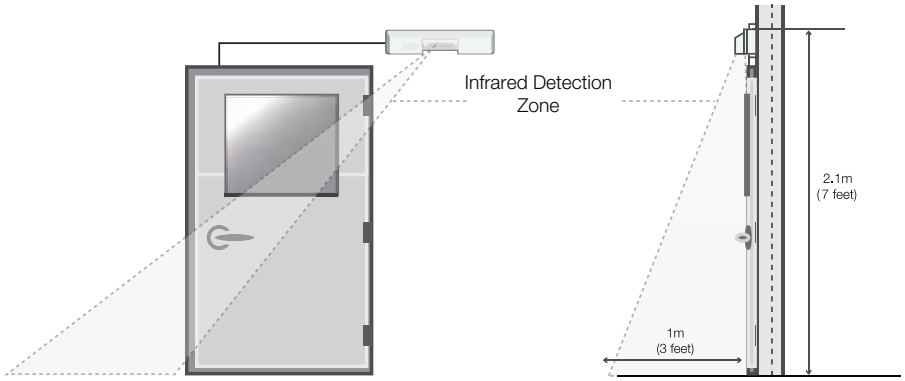

Simple Two-Step Installation:

1. Choose Location
   - Recommended locations include door header, wall or ceiling.
   - Ensure clear line of sight from detector to every part of detection area.
   - Detection zone pattern is down and away from door (to inhibit tampering).
   - Do not place detector directly across from a window
2. Adjust
   - Can be adjusted to detect an individual either in front of door or several steps away from door.
   - Detection zone span and target direction is set by turning louver direction screws.

KANTECH
From Tyco Security Products

General

Detector Type	Passive infrared
Filter Technology	Digital Signal Processing (DSP)
Detector Lens	Curtain-type Fresnel lens
Detection Range	
Narrow Targeting Area	3 m (10 ft)
Whole Body	6 m (20 ft)
Piezo Buzzer	90 dB at 28 VDC, 5-28 VDC, 20 mA (XL & XL2 only)
Main Relay Contacts	SPDT, 1A max @ 30 VDC max
Main Relay Timer	Adjustable, 0.5 to 60 seconds
Main Relay Recycle Timer	Fixed, 0.75 seconds off
Lock Control Relay	Available on LT2 and XL2 models only, solid-state relay, N.C., 2A max @ 30 VDC, timed at 2 seconds fixed
Tamper Switch	N.C., 100 mA max @ 30 VDC max
Indicator Light	Red/Green LED
Mounting	Optional backplate available for mounting the T.REX on a standard single-gang electrical box

Physical

Dimensions (H x W x D)	4.5 x 19 x 4.75 cm (1.75 x 7.125 x 1.875 in)

Electrical

Power Consumption	12-28 VDC, 50 mA

Regulatory

Certifications	UL294, CE, FCC, ULC

Model Numbers

T.REX-LT	T.Rex request-to-exit detector with tamper and timer, white
T.REX-LT-NL	T.Rex request-to-exit detector with tamper and timer, white (unbranded)
TREX-LT2	T.Rex request-to-exit detector with tamper, timer and 2 relays, white
T.REX-LT2-NL	T.Rex request-to-exit detector with tamper, timer and 2 relays, white (unbranded)
T.REX-XL	T.Rex request-to-exit detector with tamper, piezoelectric buzzer and timer, white
T.REX-XL-NL	T.Rex request-to-exit detector with tamper, piezoelectric buzzer and timer, white (unbranded)
T.REX-XLBLK	T.Rex request-to-exit detector with tamper, piezoelectric buzzer and timer, black
TREX-XL2	T.Rex request-to-exit detector with tamper, piezoelectric buzzer, timer and 2 relays, white
T.REX-XL2-NL	T.Rex request-to-exit detector with tamper, piezoelectric buzzer, timer and 2 relays, white (unbranded)
T.REX-XL2BLK	T.Rex request-to-exit detector with tamper, piezoelectric buzzer, timer and 2 relays, black
T.REX-PLATE	Single-gang box mounting back plate, white

Product Diagram

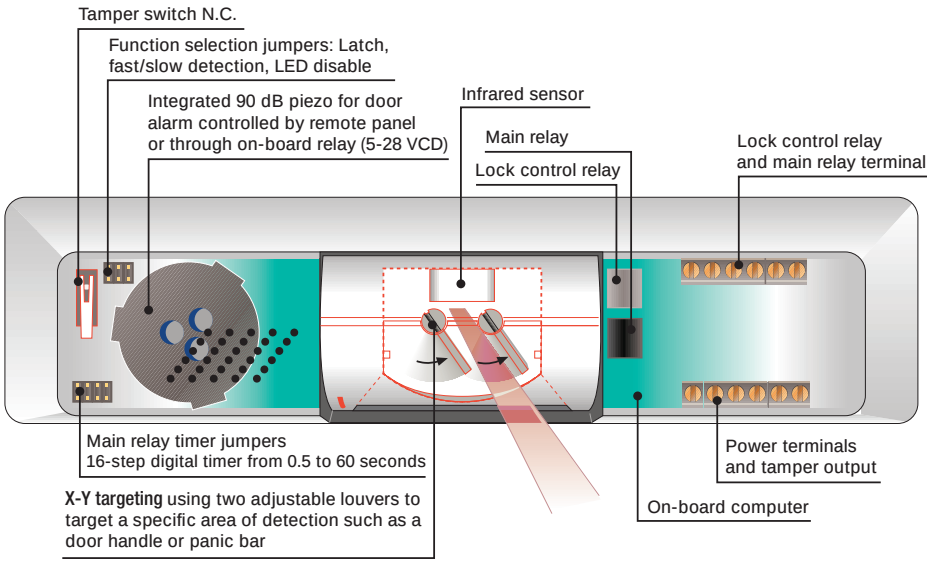

T.REX-XL2 model shown

Related Products

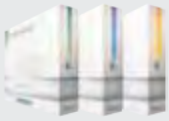

EntraPass Security Software

ioProx Readers

DK-1 Door Hardware Kit

Kantech Door Controller Family

Approvals

RoHS 2002/95/EC

www.kantech.com

© 2014 Tyco Security Products. All Rights Reserved. KT0329-DS-201401-R01-LT-EN
Tyco and the product names listed above are marks and/or registered marks. Unauthorized use is strictly prohibited.
Product offerings and specifications are subject to change without notice. Actual products may vary from photos. Not all products include all features. Availability varies by region; contact your sales representative.

Model 1200S

1200 lbs Single Magnetic Lock

Specifications

- 1200 lbs holding force
- Magnet size: 10-1/2" L x 2-7/8" H x 1-1/2" W
- Armature size: 7-3/8" L x 2-3/8" H x 9/16" W
- Operates on 12 or 24 VDC, selectable
- Low current draw: 400 mA at 12 VDC, 200 mA at 24 VDC
- Operating temperature: +14 to +131F [-10 to +55C]

Features

- Instant release, no hysteresis
- Can be used with any access control system
- Self drilling TEC screws
- Built-in arc suppression
- E-Z mount system, no special tools required
- Non-aluminum parts are plated to resist corrosion
- Limited lifetime warranty

Options

- Clear anodized (US28) finish standard
- Duranodic (US40) finish available
- Dress covers in polished chrome and brass are available

Certifications & Listings

- UL 10C fire rated
- CAN4-S104 (ULC-S104) fire door conformant
- ULC-S527 listed
- UL 864 listed

Models

1200S
1200 lbs Single Door Magnetic Lock, 12 or 24 VDC, UL 10C and Canadian UL Listed

1200SDURO
1200 lbs Single Door Magnetic Lock, 12 or 24 VDC, US 40 Duranodic Finish, UL 10C and Canadian UL Listed

ALARMCONTROLS

© 2017 Hanchett Entry Systems, Inc., an ASSA ABLOY Group Company

alarmcontrols.com • 800.645.5538

ALARM CONTROLS

ASSA ABLOY

ASSA ABLOY, the global leader in door opening solutions

8800 Series (Life-Safety) Narrow Stile Rim Exit Device

ELECTRIFIED OPTION | ALUMINUM | GRADE 1

Features

- Patented “Starwheel" bolt interlocks door to frame
- Strong, durable construction for a high level of security
- Easy to install
- Unobtrusive design for clean sight lines
- Pushbar clad or anodized, not plated, in a variety of finishes

Specifications

8800 SERIES CERTIFICATIONS:

- UL 305 Panic Hardware
- ANSI/BHMA A156.3 Grade 1
- California State Fire Marshall
- New York City MEA*

**Consult Factory for specific number*

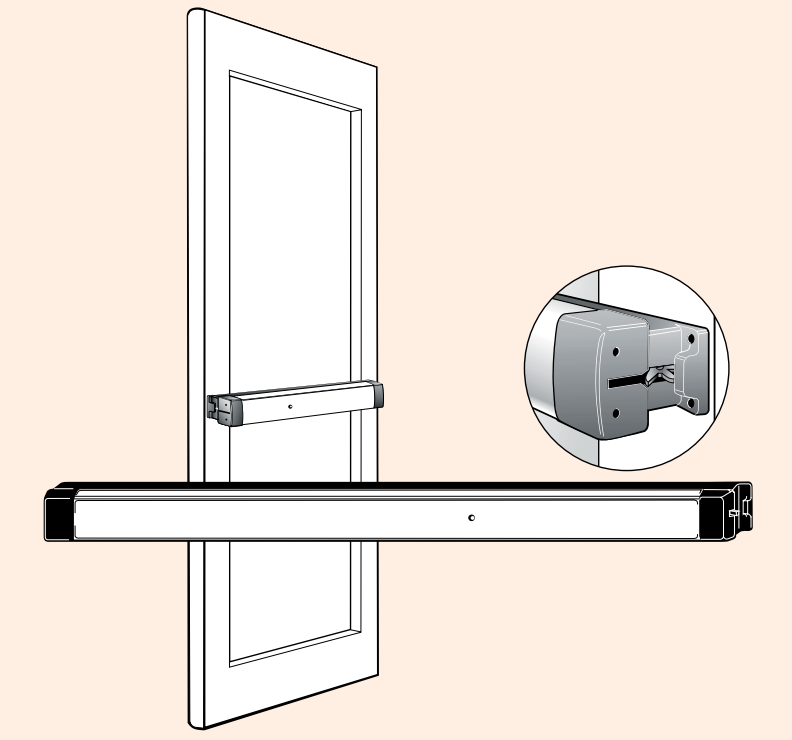

MATERIALS

- Pushbar made of extruded aluminum, clad or anodized in a variety of finishes.

HANDING

- Device is non-handed. Lever Entry Trim is field reversible.

PUSHBAR LENGTH

- Standard sizes: dimensioned for 30", 36", 42", and 48" openings. Standard width bars can be field cut to the next smallest opening width.

DOOR THICKNESS

- Suits 1-3/4" standard, up to 2-1/4".

STILE WIDTH

- Minimum 2" Stile. Fits narrow, medium, and wide stile aluminum doors.

PROJECTION

- 2-5/8" when fully projected, 1-5/8"when dogged.

DOGGING

- Standard dogging with hex key or cylinder dogging option. Electric dogging also available.

FASTENERS

- Standard self-tapping screws.

CYLINDERS

- See CYLINDERS section of this catalog for cylinder make, thumbturn and trim ring information. (Available separately).

CYLINDER X FIXED PULL (FUNCTION 03)

- Accepts any standard rim cylinder.

3080 ENTRY TRIM (FUNCTIONS 08, 09)

- Accepts any standard diameter mortise cylinder with MS® cam. Accommodates cylinder lengths from 1" to 1-1/4". (Available separately).

WARRANTY

- Five year limited.

Starwheel Bolt

1. When door closes, the interlocking noseguard and starwheel bolt close around the strike. The deadlocking slide springs over, locking the starwheel bolt to the strike.
2. When pushbar is depressed, the deadlocking slide moves back, allowing the door to unlock from the strike. This unique interlock provides solid security and prevents jamb spreading.

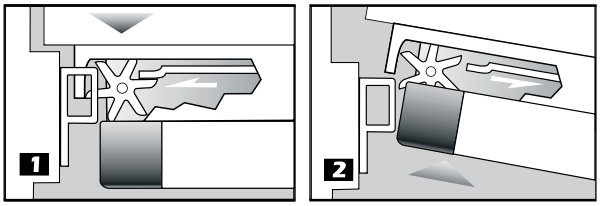

Adams Rite
ASSA ABLOY

800.872.3267 • Fax 800.232.7329
10027 S. 51st Street, Ste 102
Phoenix, Arizona 85044
www.adamsrite.com

Strike

- Made of hardened steel. Standard strike and narrow versions for centering doors in 4" jamb. (Both strikes are included.)

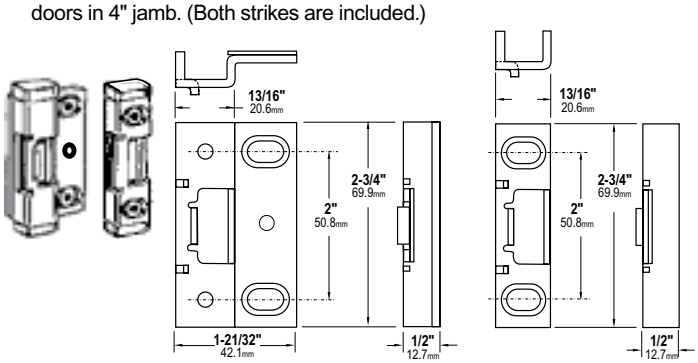

Removable Mullion - 3890

- Allows the use of rim exit devices on paired doors without narrowing the doors. Provides higher security and better traffic flow than paired doors with vertical rod exit devices. Available in anodized 313 and 628. Specify door height when ordering.

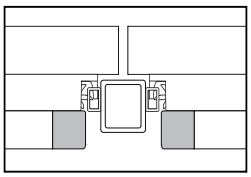

Options and Accessories

SILENT ELECTRIFICATION MOTORIZED LATCH RETRACTION

- The SE Motorized Latch Retraction option provides near-silent operation for quiet environments such as hospitals, offices, hotels, and libraries where solenoid-driven devices would be disruptive.

ELECTRIC LATCH RETRACTION

- The EL Option is offered only for our Rim Exit devices and uses a solenoid mounted in the pushbar for instantaneous unlocking and locking of the rim exit device from a remote location or access control device. The EL option is available for rim exit devices only.

ALARMED EXIT DEVICE

- This battery-operated option emits a loud (95 decibel) alarm to notify management of unauthorized exit. Available on minimum opening width 36". Cannot be ordered with other exit device options.

REQUEST TO EXIT (REX) – MONITOR / SIGNAL SWITCH

- Mounted in the exit device pushbar on the hinge end, the switch can be used to activate signal light, horn, monitor, or other devices.

CYLINDER DOGGING

- For management control of dogging exit devices for life-safety exit devices only.

ELECTRIC DOGGING

- A holding magnet keeps the pushbar depressed (set manually) and the latch retracted for lower profile exit devices, resulting in less damage and quieter operation.

MATCHING END CAPS

- Matching end caps are available for applications where it is preferable that the end caps match the finish of the exit device. Available for US finishes only.

AVAILABLE FINISHES

- 313 Dark Bronze Anodized
- 335 Black Anodized
- 628 Clear Anodized
- US3 Bright Brass
- US4 Satin Brass
- US32 Bright Stainless
- US32D Satin Stainless

For more detailed information on any of the options and accessories listed above please see the Accessories page of the EXIT DEVICE section of this catalog.

HOW TO ORDER 8800 SERIES (LIFE-SAFETY) NARROW STILE RIM EXIT DEVICE

Specify quantity and the following information. Order related products separately.

MODEL	PUSHBAR FINISH	DEVICE OPTIONS	MONITORING OPTION	DOOR OPENING WIDTH On pair of doors, specify HALF of the total exit opening	US FINISH	END CAPS OPTION	VOLTAGE
88	**01**	**C**	**M2**	**-36**			**-12**
88 Life-Safety	**00** US Finish	**EL** Electric Latch Retraction (indicate 12V/24V)	**M** Single Switch	**30** 30 inches	**US3** Bright Brass	**MEC** Matching End Caps	**12** Volts
	01 Clear Anodized 628	**SE** Silent Electrification Latch Retraction	**M2** Dual Switch	**36** 36 inches	**US4** Satin Brass		**24** Volts
	02 Dark Bronze Anodized 313	**C** Cylinder Dogging	**(Blank)** No Monitor	**42** 42 inches	**US32** Bright Stainless		(For EL Option Only)
	03 Black Anodized 335	**ED** Electric Dogging		**48** 48 inches	**US32D** Satin Stainless		
		- Without Options		**AXXB** Alarmed Exit Device where XX is door opening width			

NOTE that Alarmed Exit Device option cannot be combined with Device Options or Monitoring Options. ALSO NOTE: Split finishes (faceplate/pushbar) are not available.

RELATED ANSI TRIM FUNCTIONS

01	02	03	08	09	14
Exit only – no outside operation	No outside operation – pull only when dogged	Night latch – key retracts latch	Key outside unlocks/ locks lever	Night latch - key unlocks trim, trim retracts latch/trim relocks when key is removed	Passage only
Cylinder Type					
N/A	N/A	Rim	Mortise	Mortise	N/A

Please see TRIM Section of this catalog for information on Pulls and Entry Trim.

RELATED PRODUCTS

When purchasing this product, please consider the following related products, available separately:

Accessories	Cylinders	Trim	Power
REX-Monitor/Signal Kits.	Adams Rite exit devices are operable by either rim or mortise cylinders depending upon the ANSI/BHMA functions of the exit device.	Entry trim and fixed pulls.	4605 Transformer, 4603 Rectifier, PS-1, PS-SE, and 4612 Power Transfer Device.

©2014, Hanchett Entry Systems, Inc., an ASSA ABLOY Group company.

ACM Series

Power Supply/Chargers with Multi-Output Access Power Controllers

AL600ULACM

Description

Altronix ACM series distribute and switch power to access control systems and accessories. They convert a 115VAC 60Hz input into eight (8) independently controlled 12VDC or 24VDC fuse protected outputs. These power outputs can be converted to dry form "C" contacts. Outputs are activated by an open collector sink or normally open (NO) dry trigger input from an Access Control System, Card Reader, Keypad, Push Button, PIR, etc. Units will route power to a variety of access control hardware devices including: Mag Locks, Electric Strikes, Magnetic Door Holders, etc. Outputs will operate in both Fail-Safe and/or Fail-Secure modes. The FACP Interface enables Emergency Egress, Alarm Monitoring, or may be used to trigger other auxiliary devices. The fire alarm disconnect feature is individually selectable for any or all of the eight (8) outputs.

Key Features

- Eight (8) independently controlled outputs.

  Output options:
  a) Eight (8) Fail-Safe and/or Fail-Secure power outputs;
  b) Eight (8) form "C" 5A rated relay outputs;
  c) Any combination of the above.
- Eight (8) auxiliary power outputs (unswitched).
- Output fuses are rated @ 3.5A.
- Filtered and electronically regulated outputs.
- Supervision:
  - AC Fail
  - Battery Fail and Battery Presence.
- Fire Alarm disconnect (latching or non-latching) is individually selectable for any or all of the eight (8) outputs.
- Alarm output relay indicates that FACP input is triggered
- Fire Alarm disconnect input options:
  a) Normally open (NO) or normally closed (NC) dry contact input
  b) Polarity reversal input from FACP signaling circuit.
- Built-in charger for sealed lead acid or gel type batteries.
- Instantaneous transfer to stand-by batteries.
- UL Listed in the U.S. and Canada.
- Lifetime Warranty / Made in the U.S.A.

ACM Series Power Supply Configuration Reference Chart

<table>
<tr><th>Altronix Model Number</th><th>12VDC Total Output Current</th><th>24VDC Total Output Current</th><th>Fused Outputs</th><th>Individual Output Rating</th><th>115VAC 60Hz Input Current Draw</th><th>Power Supply Board Input Fuse Rating</th><th>Power Supply Board Battery Fuse Rating</th></tr>
<tr><td>AL400ULACM</td><td rowspan="2">4A</td><td rowspan="2">3A</td><td rowspan="6">8</td><td rowspan="6">3.5A</td><td rowspan="2">3.5A</td><td rowspan="4">5A/250V</td><td rowspan="2">15A/32V</td></tr>
<tr><td>AL400ULACMJ</td></tr>
<tr><td>AL600ULACM</td><td rowspan="2">6A</td><td rowspan="2">6A</td><td rowspan="2">3.5A</td><td rowspan="2">—</td></tr>
<tr><td>AL600ULACMJ</td></tr>
<tr><td>AL1012ULACM</td><td rowspan="2">10A</td><td rowspan="2">—</td><td rowspan="2">2.6A</td><td rowspan="4">15A/32V</td></tr>
<tr><td>AL1012ULACMJ</td></tr>
<tr><td>AL1024ULACM</td><td rowspan="2">—</td><td rowspan="2">10A</td><td rowspan="2">4.2A</td><td rowspan="2">6.3A/250V</td></tr>
<tr><td>AL1024ULACMJ</td></tr>
</table>

ACM Series
Power Supply/Chargers with Multi-Output Access Power Controllers

Altronix®

Specifications

Input

Voltage	115VAC, 60Hz.
Fusing	Varies, see Reference Chart.

Outputs

Voltage	12VDC or 24VDC, see Reference Chart.
Current	Varies, depending on the model.
Protection	Fused 3.5A.
Auxiliary	3.5A (unswitched).
Other	Overvoltage protection. Filtered and regulated outputs.

Back-up Battery *(not included)*

Capacity	12AH / 12VDC (1 or 2 within enclosure). 18AH / 12VDC (requires larger "J" enclosure). 40 AH / 65 AH (requires separate enclosure).
Type	Sealed lead acid or gel type.
Fuse Rating	15A @ 32VDC AL600ULACM(J) does not have a battery fuse.
Failover	Upon AC loss, instantaneous.

Fire Alarm Disconnect

Supervised	Latching or non-latching, individually selectable for any or all of the eight (8) outputs.
EOL	10K Resistor.

Supervision

AC Failure	Form "C" contacts.
Battery	Form "C" contacts.

Indicators (LED)

Input	115VAC is present.
DC Output	Powered.
Battery	Discharged or not connected.
Relays	Individual LEDs indicate outputs are triggered (relays energized).
FACP	Indicates FACP disconnect is triggered.

Agency Listings

All Models:

Access Control	UL294
Signal Equipment	CSA Standard C22.2 No.205-M1983

AL400ULACM(J), AL600ULACM(J) only:

California State Fire Marshall Approved

Physical and Environmental

Dimensions (H x W x D)

AL400ULACM, AL600ULACM, AL1012ULACM, and AL1024ULACM:
15.5" x 12" x 4.5" (393.7mm x 304.8mm x 114.3mm).

AL400ULACMJ, AL600ULACMJ, AL1012ULACMJ, and AL1024ULACMJ:
18" x 14.5" x 4.625" (457.2mm x 368.3mm x 117.48mm).

Product Weight / Shipping (approx.)

Model	Product Weight	Shipping Weight
AL400ULACM	10.7 lbs. (4.85 kg)	12 lbs. (5.44 kg)
AL400ULACMJ	14 lbs. (6.35 kg)	15 lbs. (6.8 kg)
AL600ULACM	10.3 lbs. (4.67 kg)	11.6 lbs. (5.26 kg)
AL600ULACMJ	14.85 lbs. (6.74 kg)	17.1 lbs. (7.76 kg)
AL1012ULACM	10.7 lbs. (4.85 kg)	12 lbs. (5.44 kg)
AL1012ULACMJ	14.1 lbs. (6.40 kg)	15 lbs. (6.80 kg)
AL1024ULACM	11.75 lbs. (5.33 kg)	13.05 lbs. (5.92 kg)
AL1024ULACMJ	14.9 lbs. (6.76 kg)	16.1 lbs. (7.3 kg)

Temperature

Operating	0ºC to 49ºC (32ºF to 120ºF).
Storage	-20ºC to 70ºC (-4ºF to 158ºF).
Relative Humidity	85% +/-5%.

BTU/Hr (12VDC/24VDC):

Model	12VDC	24VDC
AL400ULACM(J)	24.57	36.85
AL600ULACM(J)	36.85	73.70
AL1012ULACM(J)	61.42	N/A
AL1024ULACM(J)	N/A	122.84

AIPHONE®

LEF Series

Communication, Paging, and Entry Security System

Homes | Offices | Schools | Industrial Facilities

Features & Benefits

- **Mix and match a variety of stations**
  Up to 11 components can be intermixed to create the desired communication solution
- **Complements CCTV system**
  Visitors can be seen with CCTV cameras while communicating via the intercom
- **PTT and hands-free communication**
  Calls are made with push-to-talk operation and answered with hands-free communication
- **LED and call-tone indicators**
  LED lights and call tones at the master station indicate which door/sub station is calling
- **Selective door release**
  When visitors are confirmed, doors can be unlocked with the push of a button
- **Selective Call and Optional All Call**
  Provides the option to call one station at a time or to call all stations at once
- **Indoor and outdoor speakers**
  Announcements can be heard throughout the facility where speakers are installed
- **Reliable and designed to last**
  Customers can rely on this system with trouble-free use for years to come

Ideal Applications

Homes

Offices

Schools

Industrial Facilities

Components - Mix and match up to 11 door / master / sub stations

Door Stations

LE-D
Audio Door Station
- Plastic chassis
- Surface mount
- Fits 1-gang box
  4-3/4"H
  3-7/16"W
  1-1/8"D

LE-SS-1G
Audio Door Station
- Stainless steel panel
- Flush mount
- Fits 1-gang box
  4-1/2"H
  2-3/4"W
  2-1/2"D
  (back box depth)

LE-DA
Audio Door Station
- Stainless steel cover
- Flush mount
- Fits 2-gang box
  4-1/2"H
  4-9/16"W
  2-1/2"D
  (back box depth)

LE-SS/A
Audio Door Station
- Stainless steel panel
- Flush mount
- Fits 2-gang box
  4-3/4"H
  4-3/4"W
  2-1/2"D
  (back box depth)

LE-SSR
Audio Door Station
- Red mushroom call button
- Stainless steel panel
- Flush mount
- Fits 2-gang box
  4-3/4"H
  4-3/4"W
  2-1/2"D
  (back box depth)

LE-SSV
Audio Door Station
- Built-in CCTV camera
- Stainless steel panel
- Flush mount
- Fits 2-gang box
  4-3/4"H
  4-3/4"W
  2-1/2"D
  (back box depth)

LS-NVP/C
Audio Door Station
- Powder-coated steel panel
- Flush mount
- Fits 3-gang box
  7-1/2"H
  5-1/2"W
  2-1/2"D
  (back box depth)

NOTE: *Aiphone recommends a 2-1/2" minimum back box depth for all flush mount door stations.*

Master Stations

LEF-3
3-Call Audio Master Station
- Surface mount
  7-1/16"H
  5-5/8"W
  2-1/8"D

LEF-3L
3-Call Audio Master Station
- Selective door release
- Surface mount
  7-1/16"H
  5-5/8"W
  2-1/8"D

LEF-5
5-Call Audio Master Station
- Selective door release
- Surface mount
  8-1/8"H
  7-1/2"W
  2-3/16"D

LEF-10
10-Call Audio Master Station
- Selective door release
- Surface mount
  8-1/8"H
  7-1/2"W
  2-3/16"D

LEF-10S
10-Call Audio Master Station
- All Call button *(requires BG-10C)*
- Selective door release
- Surface mount
  8-1/8"H
  7-1/2"W
  2-3/16"D

LEF-3C
3-Call Audio Master Station
- All Call button *(requires BG-10C)*
- Semi-flush mount
  8-1/4"H
  6-1/8"W
  2"D (9/16" goes inside wall)

LEF-5C
5-Call Audio Master Station
- All Call button *(requires BG-10C)*
- Selective door release
- Semi-flush mount
  9-7/16"H
  7-7/8"W
  3"D (1-1/2" goes inside wall)

LEF-10C
10-Call Audio Master Station
- All Call button *(requires BG-10C)*
- Selective door release
- Semi-flush mount
  9-7/16"H
  7-7/8"W
  3"D (1-1/2" goes inside wall)

Components - Mix and match up to 11 door / master / sub stations

Sub Stations *(includes sub stations, speakers, and paging adaptors)*

LE-A
Audio Sub Station
- Surface mount
  6-1/4"H
  5-1/8"W
  2"D

LE-AN
Privacy Audio Sub Station
- Surface mount
- Privacy button
  6-1/4"H
  5-1/8"W
  2"D

LE-A3
3-Call Audio Sub Station
- Surface mount
  7-1/16"H
  5-5/8"W
  2-1/8"D

LE-AN3
3-Call Privacy Audio Sub Station
- Surface mount
- Privacy button
  7-1/16"H
  5-5/8"W
  2-1/8"D

LE-B
Audio Sub Station
- Semi-flush mount
  8-1/4"H
  6"W
  2"D (9/16" goes inside wall)

LE-BN
Privacy Audio Sub Station
- Semi-flush mount
- Privacy button
  8-1/4"H
  6"W
  2"D (9/16" goes inside wall)

LEF-1C
Audio Sub Master Station
(requires BG-10C)
- All Call button
- Semi-flush mount
  8-1/4"H
  6"W
  2"D (9/16" goes inside wall)

SP-20N/A
Ceiling Speaker
(requires NP-25V)
- 20Ω
- Indoor use
- Flush mount
  Diameter: 12-7/8"
  Baffle Diameter: 8"

AH-108
Horn Speaker
- 8Ω, 10W
- Indoor or outdoor use
- Surface mount
  Bell Diameter: 6-1/8"
  Depth: 6-1/2"

BA-1
Paging Adaptor
(requires one amplifier per paging zone - use P30BGM, DMA2060, or DMA2120)
4-1/8"H
2-1/2"W
1-1/2"D

Power Supply

PS-1225UL
12V DC Power Supply
(required for system)

Accessories

BG-10C
All Call, Chime, and Music Adaptor
(required for LEF-10S, LEF-3C, LEF-5C, LEF-10C, or LEF-1C)

P30BGM
30W Paging Amplifier

DMA2060
60W Paging Amplifier

DMA2120
120W Paging Amplifier

HID-SS
Card Access Station with HID® ProxPoint® Plus Proximity Card Reader
(requires a 3rd party host)

KMB-45
45˚ Mullion Mounting Bracket for LE-D

SBX-1G
Surface Mount Box for LE-SS-1G

SBX-2G
Surface Mount Box for LE-DA, LE-SS/A, or LE-SSR

SBX-2BH
Horizontal Surface Mount Box for HID-SS and one LE-DA, LE-SS/A, or LE-SSR

SBX-NVP
Surface Mount Box for LS-NVP/C

BBX-1E
Flush Mount Back Box for LE-B, LE-BN, LEF-1C, or LEF-3C

BBX-3E *(not shown)*
Flush Mount Back Box for LEF-5C or LEF-10C

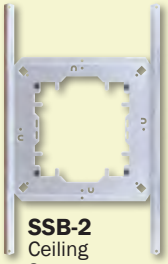

SSB-2
Ceiling Support Bracket for SP-20N/A

EL-12S
Electric Door Strike
(requires PT-1210N)

PT-1210N
12V AC Transformer
(required for EL-12S)

RY-PA
Door Release Relay

LEW-5, LEW-10, LEW-10S
Terminal Box

NP-B
Flush Mount Indoor Call Button

NP-W
Surface Mount Box for NP-B

LT-1
20Ω-to-8Ω Matching Transformer

NP-25V
33µF, 25V Non-Polarized Capacitor

RY-AC/A
External Signaling Relay

Specifications

IMPORTANT: Use 12V DC voltage only! Connecting AC voltage to an LEF Master Station can damage the unit.

Spec ▼ / Model ▶	LEF-3, LEF-3L, LEF-5, LEF-10, LEF-10S, LEF-3C, LEF-5C, LEF-10C	LE-A, LE-AN, LE-A3, LE-AN3, LE-B, LE-BN, LEF-1C	BG-10C
Power Source	12V DC, 300mA per active master station - use PS-1225UL	Drawn from master station	12V DC, 2.5A (uses system master)
Output	800mW @ 20Ω (receive), 500mW @20Ω (transmit)		
Wire Type	See wiring table below		
Wire Distance	Door / Sub Station to farthest Master Station: 650'(22AWG) 1,600'(18AWG)		500'(22AWG) 1,000'(18AWG)

Component	Wire #	Gauge	Conductor
▼ LEF Standard Wiring			
LEF-3	822210	22 AWG	10 cond., overall shield
LEF-5	822212	22 AWG	12 cond., overall shield
LEF-10, LEF-10S	822220	22 AWG	20 cond., overall shield
▼ LEF-1C Wiring			
Homerun to BG-10C	822212	22 AWG	12 cond., overall shield
Looped (max. 9 stations)	822220	22 AWG	20 cond., overall shield
LEF-3C	822212	22 AWG	12 cond., overall shield
LEF-5C	822215	22 AWG	15 cond., overall shield
LEF-10C	822220	22 AWG	20 cond., overall shield
BG-10C to Master	822220	22 AWG	20 cond., overall shield

Component	Wire #	Gauge	Conductor
▼ Sub / Door Station Wiring			
Homerun (22AWG)	822203	22 AWG	3 cond., overall shield
Homerun (18AWG)	821803	18 AWG	3 cond., overall shield
Looped (max. 4 stations)	822206	22 AWG	6 cond., overall shield
Looped (max. 8 stations)	822210	22 AWG	10 cond., overall shield
▼ Door Release Wiring (K Terminals)			
LEF-3L	822212	22 AWG	12 cond., overall shield
LEF-5, LEF-5C, LEF-10, LEF-10S, LEF-10C	822220	22 AWG	20 cond., overall shield
Additional Wiring for Door Release (optional)	822210	22 AWG	10 cond., overall shield

Local Aiphone Experts are here to help.

CONTACT US TODAY!

LEF Series Brochure
01 / 2017
Digital Copy

The information in this brochure is subject to change without notice.

GSA Schedule
GS-35F-0065L

ISO-14001 Certified — Aiphone Co. Ltd.

ISO 9001:2008 Certified — Aiphone Corp.

Deming Prize — Aiphone Co. Ltd.

Copyright © 2017. All Rights Reserved ▪ T: (800) 692-0200 ▪ info@aiphone.com ▪ aiphone.com | AIPHONE®

DL1
Door Control Timers

Rev. DSDL1_ 11202012

Overview

DL1

Door Control Timers.

Specifications

Input:
- 12 volt - 24 volt AC or DC operation.

Relay:
- Dry relay output
  (1 form "C" contact, rated @ 2 amp).
- 12VDC regulated beeper output.

Features:
- Isolated AC or DC voltage 5V-24V trigger.
- Time adjustable from 1 second to 1 minute.
- Momentary or maintained trigger.

Visual Indicators:
- Indicates relay is energized.

Electrical:
- Operating temperature: –20º C to 49º C ambient.

Mechanical:
- Board Dimensions (L x W x H approx.):
  4" (101.6mm) x 1.5" (38.1mm) x 0.75" (19.05mm).
- Product weight (approx.): 0.09 lbs. (0.04 kg).
- Shipping weight (approx.): 0.15 lbs. (0.07 kg).

Mounting Diagram

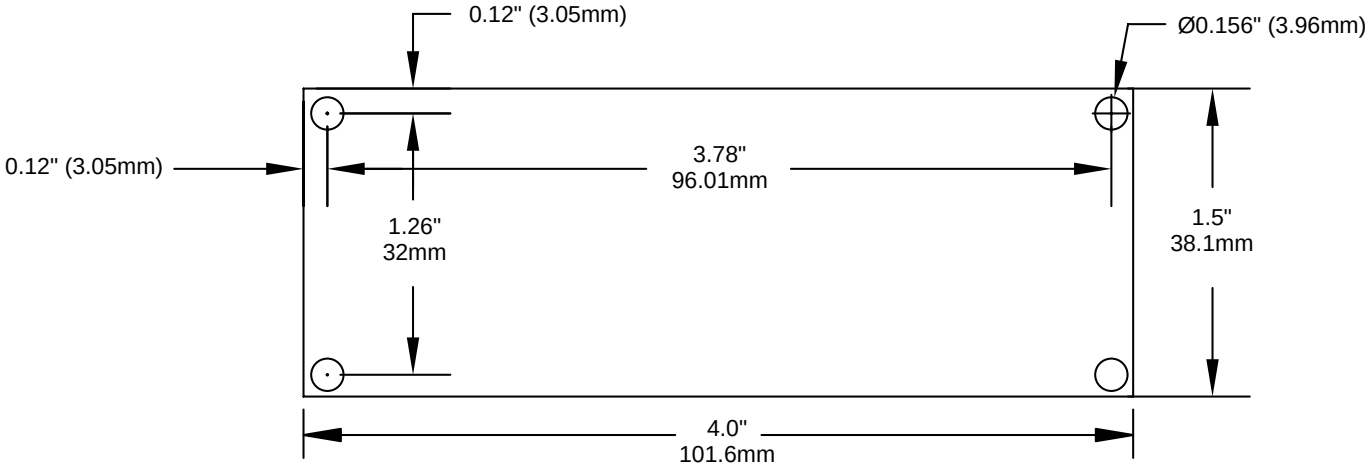

SECO-LARM KEY LOCK SWITCHES

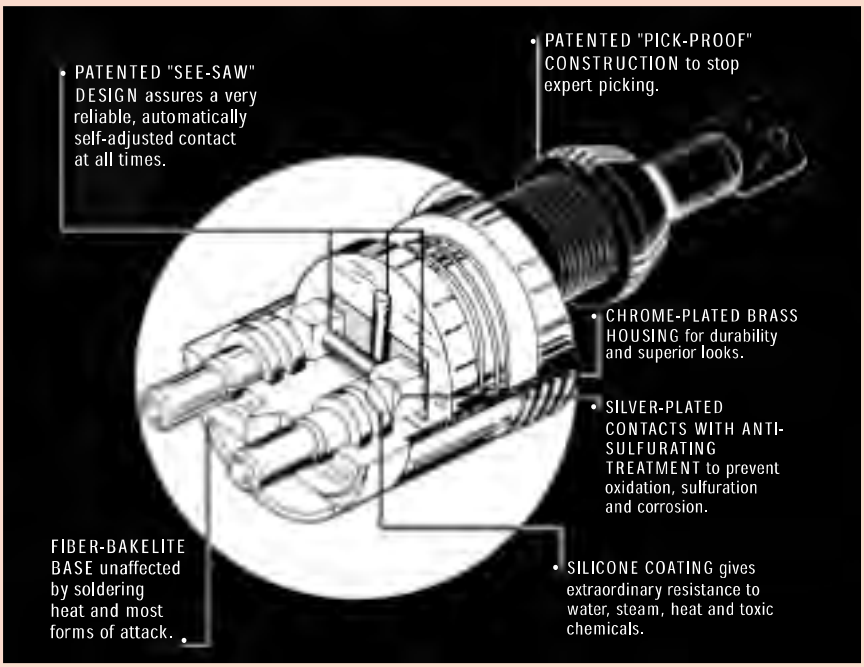

Ideal for use in residential, commercial, industrial, and vehicle burglar alarm systems, as well as computer systems, data processing equipment, and other types of equipment or machinery that requires operation by authorized personnel only.

Patented "See-Saw" contacts assure a reliable, automatically self-adjusted contact even after the contacts are worn out from prolonged use, or otherwise misaligned by vibration such as uneven road surfaces.

Designed and built to resist expert picking and attacking.

Terminal divider between terminals prevents the possibility of shorting wires when making connections.

The fiber-bakelite base is highly resistant to heat; terminals are unaffected by soldering even at 750°F (400°C) for 120 seconds. In addition, fiber bakelite makes the base extremely durable and virtually unaffected by most forms of attack.

Round terminals allow choosing between either solder or crimping connections.

Key prevented from turning 360° and from slipping past the ON and OFF positions.

Chrome-plated brass outer housing combines durability with superior looks.

SS-090

SHUNT ON/OFF 2 TERMINALS, SPST

- Maintained ON-OFF, key removable from both ON and OFF positions
- Commonly used as ON/OFF switch to arm/disarm alarm or shunt zone
- Eleven different numbers available (1300-1310)
- Extra keys available (Model # SS-090KN)

SS-090-1

SHUNT ON/OFF, 2 TERMINALS, SPST

- Maintained ON-OFF, key removable from OFF position only
- Commonly used in situations which require return of key to ensure device is turned OFF.

SS-095

MOMENTARY ON/SHUNT OFF, 2 TERMINALS, SPST

- Maintained OFF, springs back from ON, key removable from OFF only
- Commonly used for momentary arm/disarm alarm inputs or other applications requiring high-security momentary ON
- Eleven different numbers available (1300-1310)
- Extra keys available (Model # SS-090KN)

SS-092-2

SHUNT ON/OFF, OFF/ON 4 TERMINALS, DUAL SPST

- Two switches — one always on while the other is OFF.
- Connect terminals 1 & 2 for SPDT contact.
- Use to arm/disarm car alarms and break starter circuit.

The SECO-LARM policy is one of continual development and improvement. For that reason, SECO-LARM reserves the right to change specifications without notice. SECO-LARM is not responsible for misprints.

For more information, contact
SECO-LARM® U.S.A., Inc.
16842 Millikan Avenue
Irvine, CA 92606

Tel: 1-800-662-0800 (domestic U.S. & Canada)
Tel: 1-949-261-2999 (California & international)
Fax: 1-949-261-7326 Email: info@seco-larm.com
Web: www.seco-larm.com

SS-090-1pg_Pdf2.pmd - Copyright ©2006 SECO-LARM U.S.A., Inc.

1720 Hayden Drive
Carrollton, TX 75006
P: 469.892.1122
F: 469.892.1123
www.upgi.com

maintenance-free

sealed lead-acid battery

model #UB1280 (AGM) upg #D5743

Dimensions Terminal type: .187 FASTON

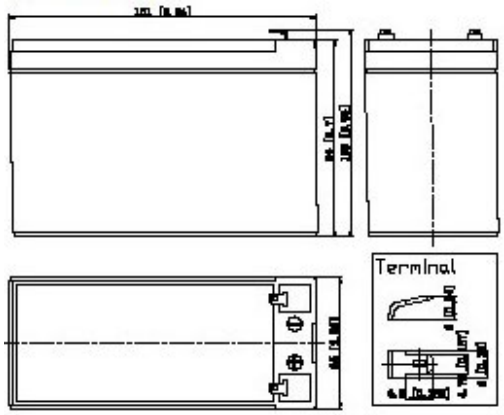

Discharge characteristics 77° F (25° C) (Note)

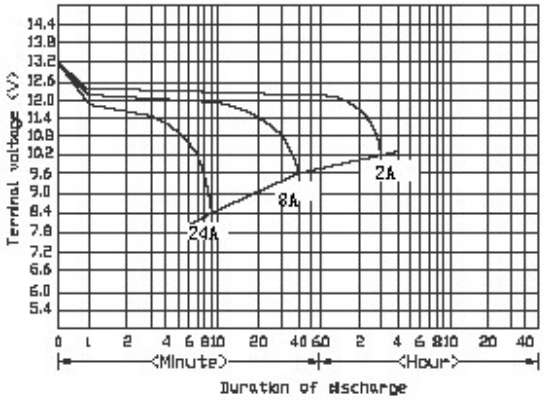

Duration of discharge vs. Discharge current (Note)

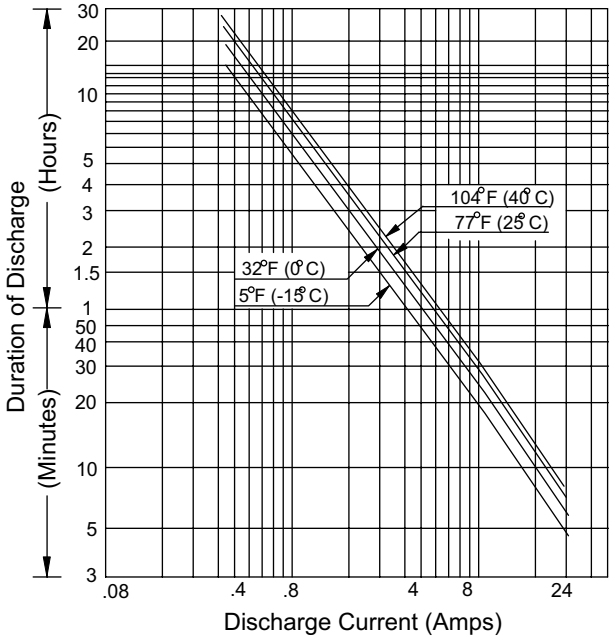

Specifications

Nominal voltage		12V
Rated capacity (20 hour rate)		8.0Ah
Dimensions	Length	5.94in (150.9 mm)
	Width	2.56in (65.0 mm)
	Height	3.70in (94.0 mm)
	Total Height	3.94in (100.1 mm)
Approx. weight		4.96lbs (2.2 kg)

Characteristics

Capacity(Note) 77° F (25° C)		20 hour rate(0.40A) 10 hour rate(0.74A) 5 hour rate(1.36A) 1 hour rate(4.80A)	8.0Ah 7.44Ah 6.80Ah 4.8Ah
Internal resistance (milliohms)		Fully charged battery 77° F (25°C)	Approx. 23
Temperature dependency of capacity (20 hour rate)		104° F 77° F 32° F 5° F	102% 100% 85% 65%
Self discharge 77° F (25°C)		Residual capacity after standing 3 months	91%
		Residual capacity after standing 6 months	82%
		Residual capacity after standing 12 months	64%
Charge Method (Constant Voltage)	Cycle use (Repeating use)	Initial current	2.8 A or smaller
		Control voltage	14.5-14.9 V
	Float use	Control voltage	13.6-13.8 V

(Note) The above characteristics data are average values obtained within three charge/discharge. Cycles not the minimum values.

Fire Alarm Cables

WEST PENN WIRE

UNSHIELDED FIRE ALARM CABLES

UNSHIELDED FIRE ALARM CABLES										
AWG Size	# of Cond.	FPL			FPLR	FPLP	NPLF	NPLFP	FPLR-CIC	FPLR-CI
		Aquaseal	Low Cap	Parallel	Mid-Cap	Mid-Cap	Mid-Cap	Mid-Cap	Mid-Cap	Mid-Cap
12 Solid	2			974	998	60995B			5020UZ	5020UM
14 Solid	2			972	994	60993B	1994	251994	5120UZ	5120UM
14 Solid	4				700	60700B				5122UM
16 Solid	2		D990	971	990	60991B	1990		5220UZ	5220UM
16 Solid	4				992	60164B				5222UM
18 Solid	2		D980	970	980	60980B		251980		5320UM
18 Solid	4		D982		982	60992B				5322UM
12 Strd	2	AQ227			998S				5000UZ	
14 Strd	2	AQ226			994S				5100UZ	
14 Strd	4	AQ246								
16 Strd	2	AQ225			990S				5200UZ	
16 Strd	4	AQ245								
18 Strd	2	AQ224								
18 Strd	4	AQ244								

SHIELDED FIRE ALARM CABLES

SHIELDED FIRE ALARM CABLES										
AWG Size	# of Cond.	FPL		FPLR	FPLP		NPLF	NPLFP	FPLR-CIC	FPLR-CI
		Aquaseal	Low Cap	Mid-Cap	Mid-Cap	Low-Cap	Mid-Cap	Mid-Cap	Mid-Cap	Mid-Cap
12 Solid	2			999	60994B		1999		5020FZ	5020FM
12 Solid	4								5022FZ	5022FM
14 Solid	2		D995	995	60992B		1995	251995	5120FZ	5120FM
14 Solid	4						1997			5122FM
16 Solid	2		D991	991	60990B	D60990	1991	251991	5220FZ	5220FM
16 Solid	4			993	603164B				5222FZ	5222FM
18 Solid	2		D975	975	60975B	D60975	1975	251975		5320FM
18 Solid	4			977	60977B					5322FM
12 Strd	2	AQ296							5000FZ	
14 Strd	2	AQ295							5100FZ	5100FM
14 Strd	4								5200FZ	
16 Strd	2	AQ294								5200FM
16 Strd	4	AQ3245								
18 Strd	2	AQ293								5300FM
18 Strd	4	AQ3244								

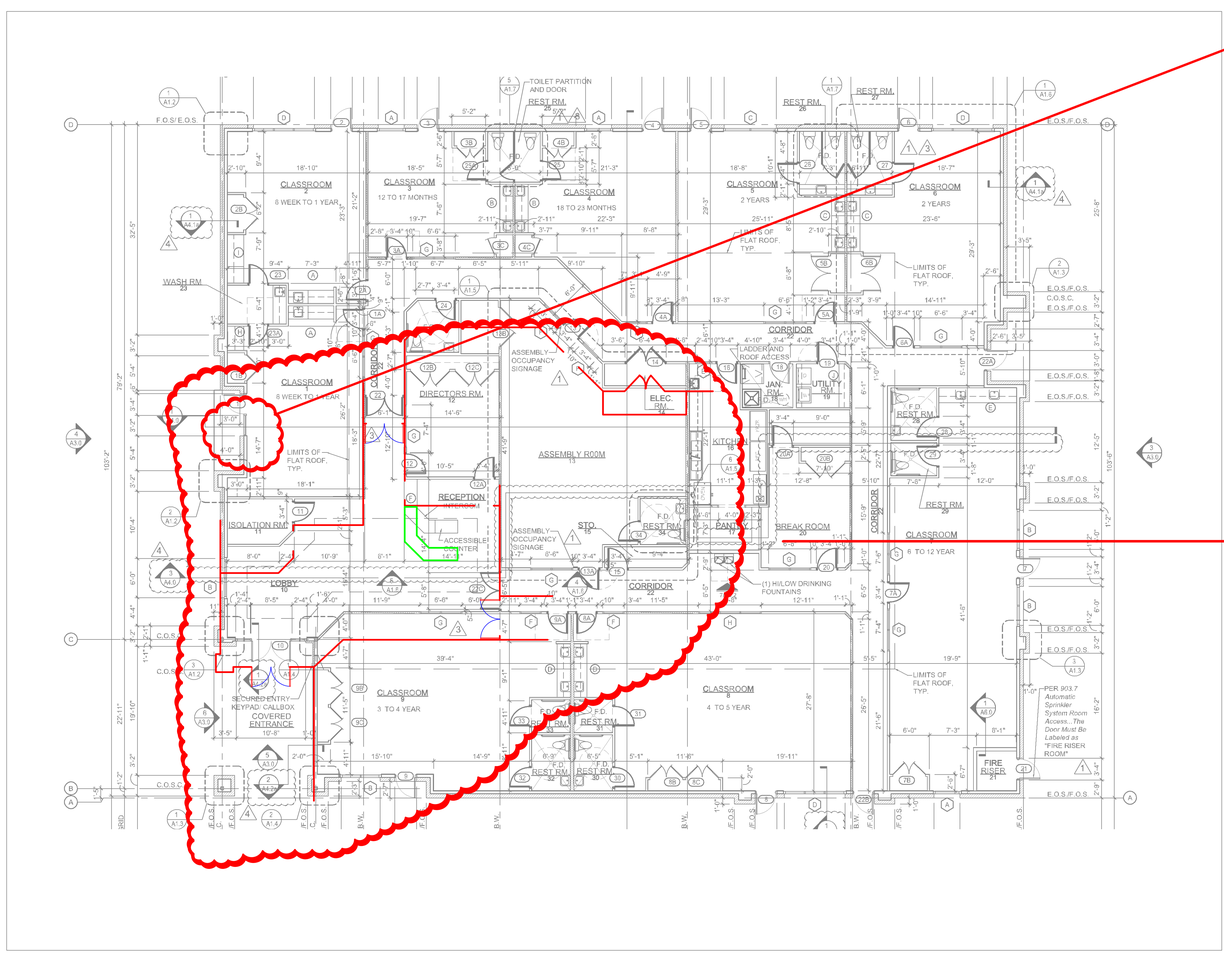

8800 EGRESS BAR INSIDE WILL MECHANICALLY UNLOCK THE DOOR
THESE DOORS WILL NOT HAVE A MAGNETIC DOOR LOCK

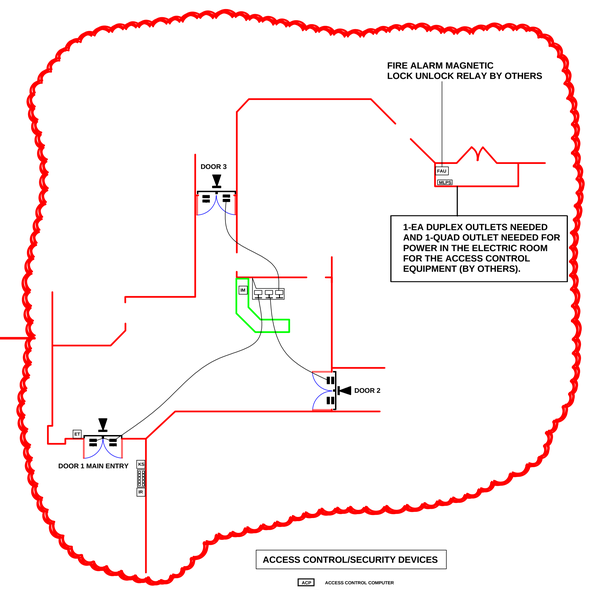

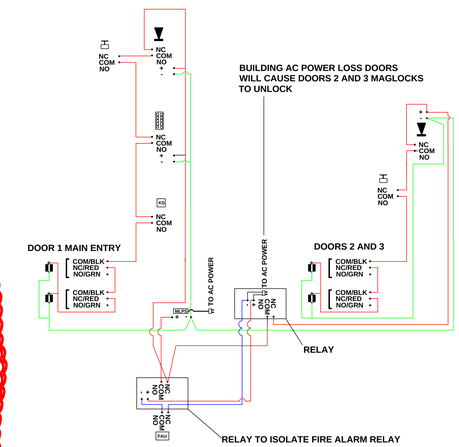

FIRE ALARM

ANY FIRE ALARM SHALL AUTOMATICALLY UNLOCK ALL MAGNETICALLY HELD DOORS

DOOR 1 OPERATION

OUTSIDE OPERATION

INSERTING A KEY OUTSIDE IN THE KEYSWITCH WILL UNLOCK THE EXTERIOR DOORS ENTERING A PIN NUMBER ON THE OUTSIDE READER WILL UNLOCK THE DOOR FOR 30 SECONDS

INSIDE OPERATION

PUSHING THE EGRESS BAR INSIDE WILL MECHANICALLY UNLOCK THE DOOR

THE EXIT BARS HAVE AN INTERNAL MECHANICAL SWITCH THAT WILL OPEN

THE POWER CIRCUIT TO THE MAGNETIC LOCKS WHEN PRESSED
THE EXIT BARS REQUIRE NO PRIOR KNOWLEDGE TO UNLOCK THIS PAIR OF DOORS
MOTION ON THE INSIDE OF THE DOOR WILL UNLOCK THE DOOR FOR 30 SECONDS
PRESSING THE RECEPTIONIST BUTTON WILL UNLOCK THE EXTERIOR DOORS
THESE DOORS TO REMAIN LOCKED ON AC POWER FAILURE UNTIL THE BATTERIES ARE DISCHARGED

DOOR 2 AND 3 OPERATION

PUSHING THE EGRESS BAR INSIDE WILL MECHANICALLY UNLOCK THE DOOR

THE EXIT BARS HAVE AN INTERNAL MECHANICAL SWITCH THAT WILL OPEN

THE POWER CIRCUIT TO THE MAGNETIC LOCKS WHEN PRESSED
THE EXIT BARS REQUIRE NO PRIOR KNOWLEDGE TO UNLOCK THIS PAIR OF DOORS MOTION ON THE INSIDE OF THE DOOR WILL UNLOCK THE DOOR FOR 30 SECONDS PRESSING THE RECEPTIONIST BUTTON WILL UNLOCK THE EXTERIOR DOORS THESE DOORS WILL UNLOCK ON AC POWER FAILURE

ACCESS CONTROL/SECURITY DEVICES

ACP	ACCESS CONTROL COMPUTER
	EXIT RELEASE BUTTON
	CARD OR PIN READER
MLPS	MAGLOCK POWER SUPPLY
	CEILING MOTION DETECTOR
	MAGNETIC DOOR LOCK
FAU	FIRE ALARM UNLOCK RELAY
ET	EXIT BUTTON DOOR UNLOCK TIMER
FAP	120VAC POWER TO FACP
IM	INTERCOM MASTER STATION
IR	INTERCOM REMOTE CALL STATION

CODE REQUIREMENTS
CODE 2015 IBC AND IFC
E OCCUPANCY
EGRESS BARS ARE MECHANICAL SWITCH DEVICES-NO PRIOR KNOWLEDGE IS REQUIRED TO OPERATE THESE EXIT DEVICES

NORTH

DATE: 1_LF 4-24-16
JOB NO:

SHEET NO.
AC-1